GENERAL NOTES (UNLESS OTHERWISE SPECIFIED)

REVISIONS						
REV	ECN	DESCRIPTION OF CHANGE	DRAWN	CHKD	APVD	DATE

Sensor Terminals:

Sensor Types:
DT065
DT100
DT150

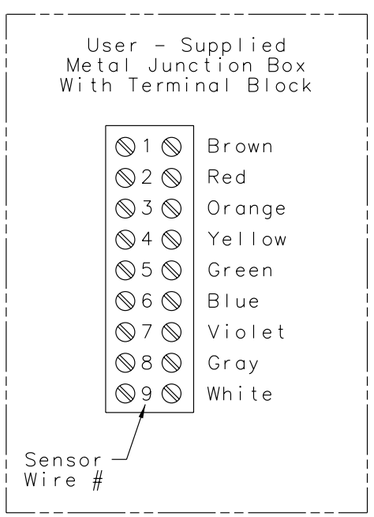

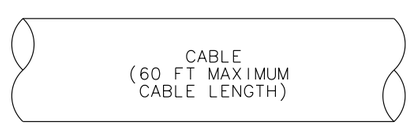

NOTE: PREPARE CABLE PER THE INSTRUCTIONS PROVIDED WITH THE CABLE.

Transmitters:

1700C
2700C

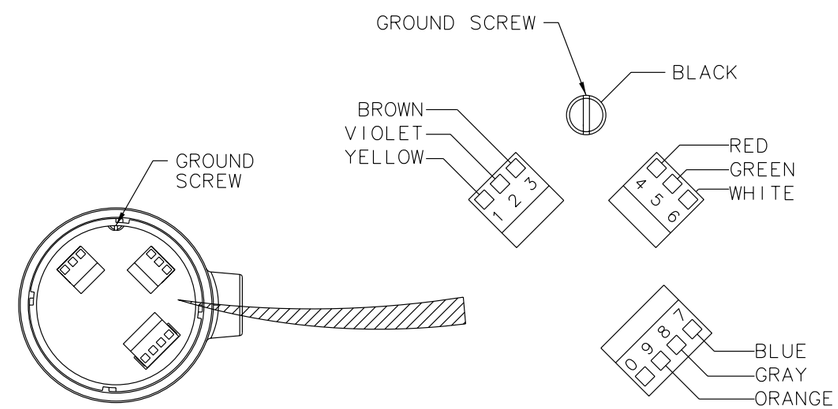

ITEM	DESCRIPTION	PART OR REF. NO.	MATL. OR MFGR	QTY.

MICRO MOTION, INC.
BOULDER, COLORADO

THIRD ANGLE PROJECTION

WIRING, DT TO 1700C/2700C

	NAME	DATE
DRAWN	LLR	4/16/02
CHKD.	JLA	11/5/02
APVD.	JLA	11/5/02

SIZE D | DWG. NO. EW-20000059 | REV. B

SCALE NONE | DO NOT SCALE DRAWING | SHEET 1 OF 1

COPYRIGHT 2005 MICRO MOTION, INC.
ALL RIGHTS RESERVED