GENERAL NOTES (UNLESS OTHERWISE SPECIFIED)

REVISIONS						
REV	ECN	DESCRIPTION OF CHANGE	DRAWN	CHKD	APVD	DATE

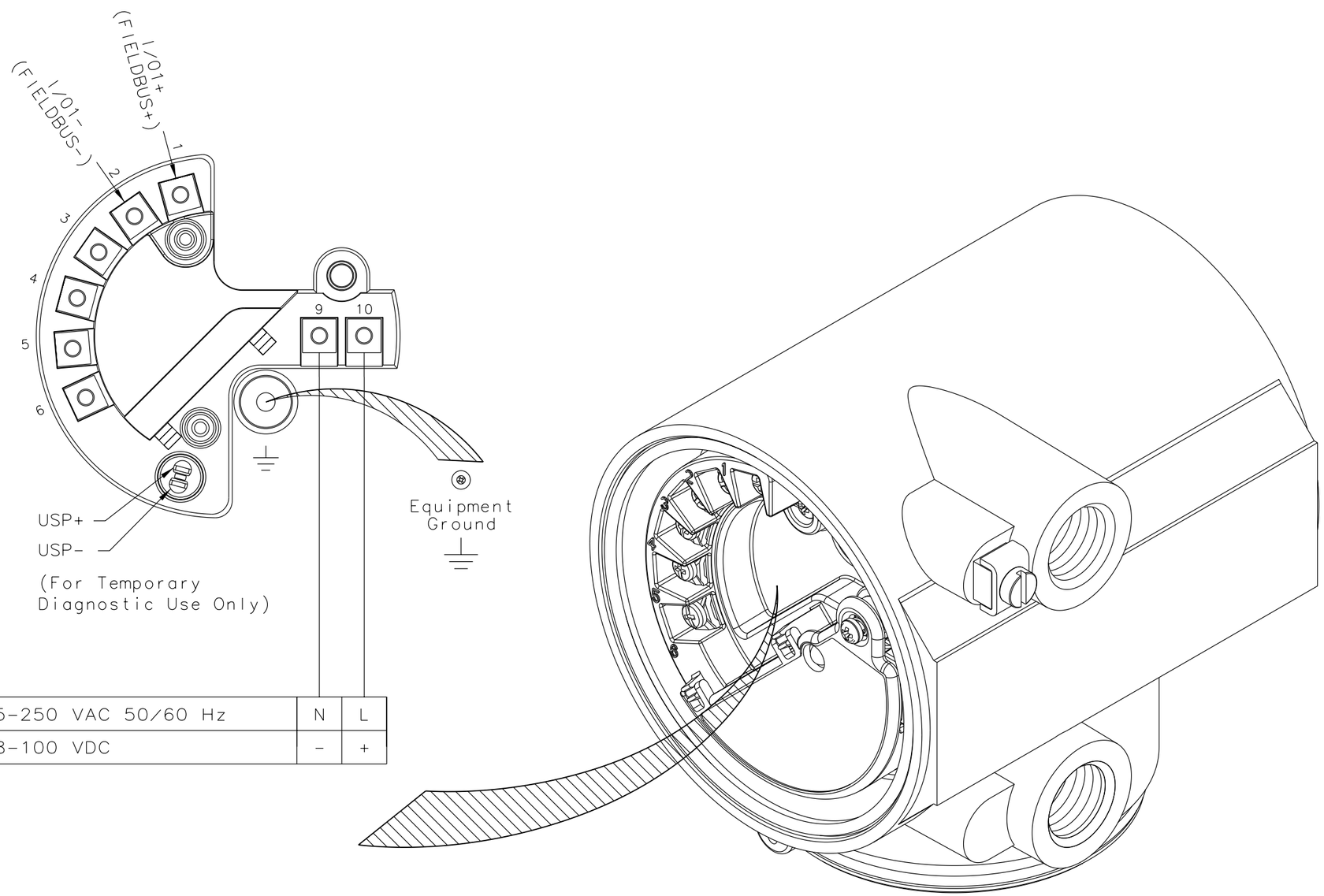

85-250 VAC 50/60 Hz	N	L
18-100 VDC	-	+

ITEM	DESCRIPTION	PART OR REF. NO.	MATL. OR MFGR	QTY.

MICRO MOTION, INC.
BOULDER, COLORADO

THIRD ANGLE PROJECTION

WIRING, 2700
FOUNDATION FIELDBUS

	NAME	DATE
DRAWN	LLR	4/25/02
CHKD.	JLA	11/5/02
APVD.	JLA	11/5/02

SIZE D | DWG. NO. EW-20000139 | REV. A

SCALE NONE | DO NOT SCALE DRAWING | SHEET 1 OF 1

COPYRIGHT 2002 MICRO MOTION, INC.
ALL RIGHTS RESERVED